OMCAN

FOOD EQUIPMENT

SERVING THE FOOD INDUSTRY SINCE 1951

SANTOS #63 COFFEE SHOP GRINDER

Item: 44636 Model: SANTOS 63

CONVENIENTLY GRIND COFFEE BEANS FAST AND EASY!

Santos' #63 Coffee Shop Grinder is the ideal appliance for all stores which distribute large quantities of ground coffee: coffee shops, supermarkets and roasting establishments. Fast, precise and reliable, it makes a quality grinding; thanks to its precise setting and its Ø 120mm grinding discs, designed and manufactured by Santos. Perfect to make turkish coffee.

handmade IN FRANCE

c UL us

Authorized Dealer

FOOD EQUIPMENT
SANTOS #63 COFFEE SHOP GRINDER

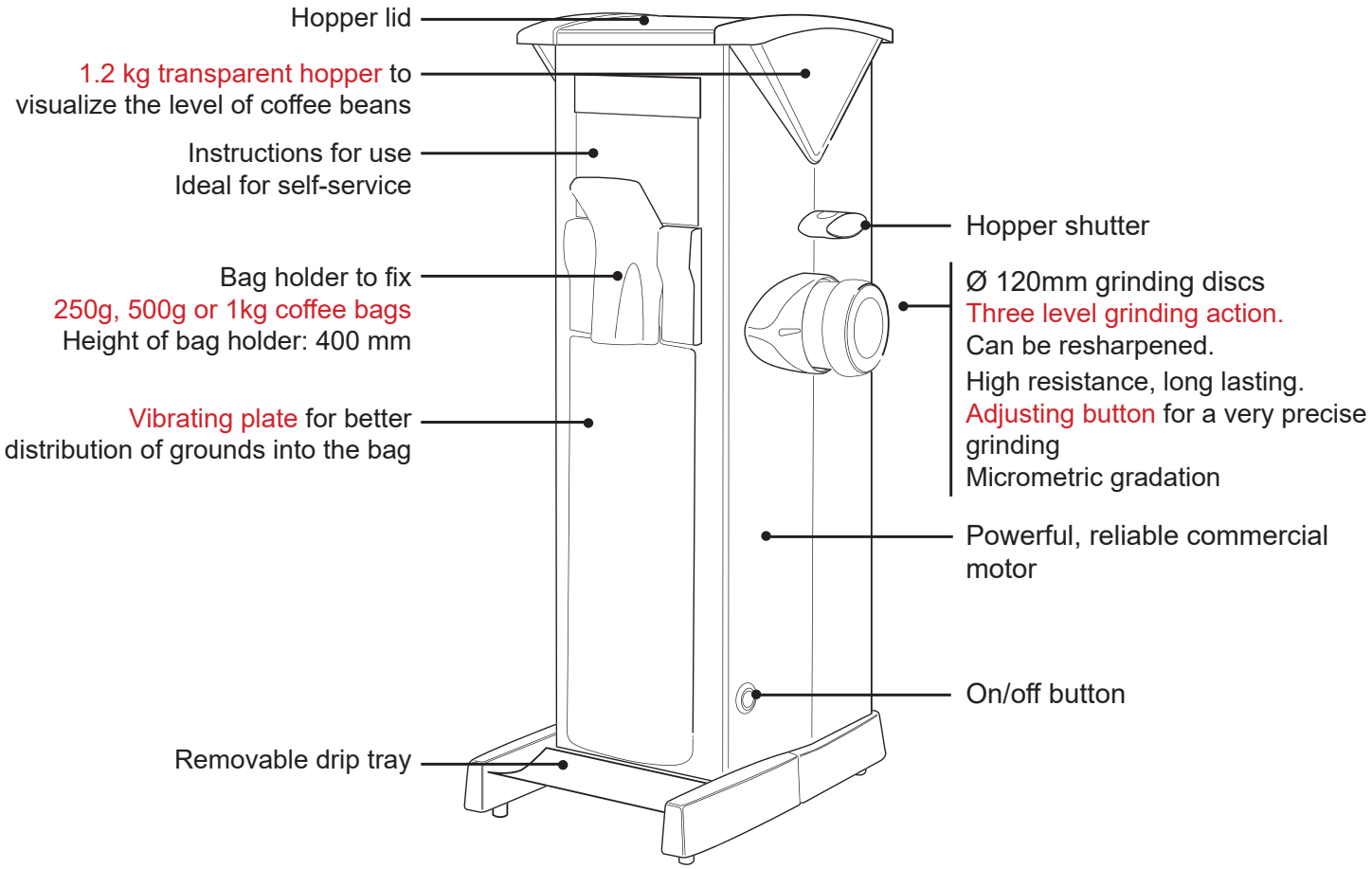

Features:

Powerful, Exceptional Performance

- Powerful asynchronous motor, very silent
- Extremely fast and has a max output of 120kg/h
- Sturdy product; adapted to intensive use

Comfort of Use

- Accepts all kinds of bags: from 250g to 1kg
- Extremely silent for a great comfort of use
- Display of instructions on how to use the grinder; ideal for self-service use

Precision and Quality Grinding

- Santos manufactures its own grinding discs to give you a perfect, constant and fine grinding (no burnt coffee effect)
- The coffee grinder #63 is equipped with triple cut grinding discs (Ø 120mm) that can be resharpened
- Very precise micrometric setting of the grinding fineness
- Makes turkish coffee; Turkish coffee output: 36kg/h

OMCAN INC.
Telephone: 1-800-465-0234
Fax: (905) 607-0234
E-mail: sales@omcan.com
Website: www.omcan.com

CELEBRATING MORE THAN 60 YEARS OF SERVICE
60
EST. 1951

Follow us to keep up to date with the latest news and offers

2019.E.O.E

FOOD EQUIPMENT
SANTOS #63 COFFEE SHOP GRINDER

TECHNICAL SPECIFICATIONS

ITEM NUMBER	44636
MODEL	SANTOS 63
POWER	500W
OUTPUT	Up to 120 kg/hour
ELECTRICAL	120V / 60Hz / 1Ph
DIMENSIONS (WDH)	11” x 13” x 27” / 279.4 x 330.2 x 330.2 x 685.8 mm
NET WEIGHT	88 lbs. / 40 kg.
GROSS DIMENSIONS	20” x 26” x 35” / 508 x 660.4 x 889 mm
GROSS WEIGHT	108 lbs. / 49 kg.

SAFETY | STANDARDS | HYGIENE

In accordance with the following regulations:

- Machinery directive 2006/42/EC
- Electromagnetic compatibility 2004/108/EC
- “Low voltage” Directive 2006/95/EC
- Regulation 1935/2004/EC (contact with food)
- RoHS directive 2002/95/EC

Harmonized European standards

- EN ISO 12100 - 1 and 2: 2004
- EN 60204-1: 2006
- EN 60335-2-64 :2004 Commercial electric kitchen machines

- CE European standards

Electric Safety

- On/Off interlock switch is waterproof
- All mechanical parts are ground connected
- Appliances are 100% tested after assembly

Thermal Safety

Motor protected by internal thermal detector

Acoustic Safety

Very silent and powerful asynchronous motor

Hygiene

All removable parts can be put in a dishwasher or easily cleaned with hot soapy water

OMCAN INC.
Telephone: 1-800-465-0234
Fax: (905) 607-0234
E-mail: sales@omcan.com
Website: www.omcan.com

CELEBRATING MORE THAN 60 YEARS OF SERVICE
60
EST. 1951

Follow us to keep up to date with the latest news and offers

2019.E.O.E